UDC 629.463.65
DOI https://doi.org/10.32782/2663-5941/2025.2.1/06

Fomin O. V.
State University of Infrastructure and Technologies

Burlutskyi O. V.
Ukrainian State University of Railway Transport

Krasulin A. S.
Priazovsky State Technical University

Tarasenko A. V.
National University "Zaporizhzhia Polytecnic"

Gunko I. V.
State University of Infrastructure and Technologies

MATHEMATICAL DESCRIPTION OF THE SHRINKAGE FUNCTION FOR DETERMINING DEFORMATIONS OF MECHANICAL ENGINEERING STRUCTURES

The article is devoted to the mathematical description of the shrinkage function which is used to determine deformations after welding works in machine-building structures. The article indicates the importance of railway transport in its general transport system of the country, and also notes its leading role in the implementation of domestic and foreign economic relations of the country.

The important role of the welding technological process in the production of new and modernization of existing units of the car fleet is indicated. An important role is played by predicting the stress-strain state of large-sized welded structures is currently possible only with the help of the approximate method of the shrinkage function. One of the first works where the method and stresses based on the shrinkage function are used is the work of E. O. Paton and colleagues, published in 1936, which presents a comprehensive study of residual welding stresses. Here, the idea of calculating residual welding stresses by the methods of the theory of elasticity for a given value of shrinkage longitudinal deformations, which were determined experimentally from simple experiments, is used.

Deformations of metal structures of wagons are a common problem that occurs during their manufacture, operation and repair. The main causes of these deformations are residual stresses that arise during welding, as well as mechanical damage during operation. According to the design standards of a wagon, the stresses in it are determined by longitudinal forces acting along the coupling axis and the vertical load, which includes the payload and the dead weight of the wagon body.

The work also proposes to use a computational-experimental method for solving the inverse problem, taking into account the results of measuring welding deformations on small samples for the most accurate determination of the parameters of the shrinkage function. The article discloses the methodology for calculating deformations of wagon metal structures that arise during their welding.

The results are a mathematical description of the shrinkage function for determining deformations of machine-building structures. As an example, the results of mathematical modeling of the backbone beam of freight cars are given. Based on the results obtained, the feasibility and need for further research into the possibility of using methods to reduce residual stresses, for example, optimizing the technology of pre-bending the beam before welding, is justified. This approach can become an alternative to the thermal straightening method, contributing to reducing residual deflection and increasing the accuracy of manufacturing metal structures

Key words: *railway transport, rolling stock, car fleet, welding, machine-building structures, post-welding deformations, shrinkage functions, mathematical description, mathematical models.*

Formulation of the problem. During the life cycle, all engineering objects perceive different types of loads. In general, loads can be divided into: typical for operation and non-typical. In this case, it is desirable that engineering objects do not lose their performance when exposed to non-typical loads and / or have the ability to restore it.

Correction of deformations of machine-building structures is always an important and relevant scientific and applied problem. The technical and economic indicators of the operation of the facility at different stages of the life cycle largely depend on the effectiveness of its solution. Therefore, the expected results of solving the scientific problem of correcting deformations of the relevant machine-building facilities are relevant and timely [1].

Analysis of recent research and publications. Forecasting the stress-strain state of large-sized welded structures is currently possible only using the approximate method of the shrinkage function. One of the first works, where the method and stresses based on the shrinkage function are used, is the work of E. O. Paton and colleagues, published in 1936 [2], which provides a comprehensive study of welding residual stresses. Here, the idea of calculating the residual welding stresses by the methods of the theory of elasticity for a given value of shrinkage longitudinal deformations, which were determined experimentally from simple experiments, was used. Deformations of railcar metal structures are a common problem that occurs during their manufacture, operation and repair. The main causes of these deformations are residual stresses arising from welding processes, as well as mechanical damage during operation [3–6].

According to the norms of wagon design, the stresses in it are determined by the longitudinal forces acting along the axis of the coupling, and by the vertical load, which includes the payload and the own weight of the wagon body [7–8].

The relevance of the problem of forecasting general deformations of large-sized welded structures, as well as the effectiveness of using the shrinkage function method for these purposes, are confirmed by the results of works [9]. In the paper, based on a comparison with the results of experimental measurements and the results of calculations using the thermoplasticity method, the high accuracy of determining the welding deformations of shipbuilding panels using the approximate method of the shrinkage function is shown. Also, in this paper, it is proposed to use the calculation-experimental method of solving the inverse problem taking into account the results of measuring welding deformations on small samples for the most accurate determination of the parameters of the shrinkage function.

Task statement. Is a mathematical description of the shrinkage function for determining deformations of mechanical engineering structures (On the button Railway transport).

Outline of the main material of the study. To determine the shrinkage function, a calculation scheme was chosen using a maximally simplified model of butt welding of plates of limited dimensions from the point of view of geometry. However, the search for a solution is carried out on the basis of general methods of thermoplasticity and the finite element method. A generalized representation of shrinkage function methods is given in [4]. The shrinkage function is generally represented by a symmetric second-rank tensor in the form:

$$\Pi_{ij} = \begin{Vmatrix} \Pi_{xx} & \Pi_{xy} & \Pi_{xz} \\ \Pi_{yx} & \Pi_{yy} & \Pi_{yz} \\ \Pi_{zx} & \Pi_{zy} & \Pi_{zz} \end{Vmatrix} \quad (i, j = x, y, z), \qquad (1)$$

where Π_{xx}, Π_{yy}, Π_{zz} – normal components of the shrinkage function. The condition of conservation of volume gives

$$\Pi_{xx} + \Pi_{yy} + \Pi_{zz} = 0 \qquad (2)$$

The tangential components satisfy the symmetry condition, i. e. $\Pi_{xy} = \Pi_{yx}$, etc. For thin-walled elements of welded structures, for which the basic hypotheses of the theory of plates and shells are applicable [7, 12], the components of the tensor Π_{ij} have the form

$$\Pi_{ij}(x, y, z) = \Pi^0_{i,j}(x, y) + æ_{ij}(x, y), \qquad (3)$$

where $\Pi^0_{i,j}(x, y)$ – shrinkage in the middle surface of the element $z = 0$, $æ_{ij}(x, y)$ – corresponding curvature of the shrinkage function at the point x, y.

When determining the «shrinkage function» for the case of bending deformations, when welding beams, it is usually sufficient to consider a characteristic section x = const, within which the temperature field of heating and cooling is known $T(y, z, t)$ and external axial force $N_{xx}(t)$ and moments $M_{yy}(t)$ и $M_{zz}(t)$. This is a statically determined problem, where at each step of tracing the increment of curvature is $\Delta x_{yy}(t)$ и $\Delta x_{zz}(t)$ and longitudinal shortening $\Delta\varepsilon^0_{xx}(t) = \Delta\varepsilon_{xx}(0,0,t)$ are determined within the framework of beam hypotheses from the equilibrium equations [10, 11]

$$\Delta\varepsilon^0_{xx} L_{j1} + \Delta x_{zz} L_{jz} + \Delta x_{yy} L_{jy} + \mathrm{P}_j = \bar{M}_j, \quad (j = 1, z, y). \qquad (4)$$

Where $L_{iq} = \int_F \frac{j \cdot q}{B_1} dF \quad (i, q = 1, z, y),$

$$\mathrm{P}_j = \int_F b_{xx} \frac{dF}{B_1} j \quad (j = 1, z, y),$$

F – beam cross-sectional area, $\bar{M}_j$ – external load, i. e. when $j = 1$ this is an effort $N_{xx}(t)$, a at $j = z, y$ – moments accordingly $M_{zz}(t)$ and $M_{yy}(t)$, acting in a given section at a given moment in time t, B_1 – is expressed through the state function of the material ψ, the bulk modulus

$$K = \frac{1 - 2\nu}{E}$$

as for a plane stress state, i. e.

$$B_1 = \frac{2\psi + K}{3};$$

b_{xx} in (1) also corresponds to a plane stress state, but only for non-zero normal stresses σ_{xx}, i. e.

$$b_{xx} = \left(\frac{\sigma_{xx} - \frac{1}{3}\sigma_{xx}}{2G} + K \frac{\sigma_{xx}}{3} \right)_{t-\Delta t} - \\ - \Delta\varphi = \left(\frac{\sigma_{xx}}{E} \right)^{*)} - \Delta\varphi. \quad (5)$$

$\sigma_{xx}(y, z, t)$ are determined by dependence:

$$\sigma_{xx}(y, z, t) = \\ = \frac{1}{B_1} \left[\Delta\varepsilon_{xx}^0(t) + \Delta x_{zz}(t) \cdot z + \Delta x_{yy}(t) \cdot y - b_{xx} \right]. \quad (6)$$

The state function $\psi(y, z, t)$ is found iteratively using the well-known algorithm [10]. At each iteration with respect to ψ, it is necessary to solve the system of equilibrium equations (1), the matrix of which is symmetric and positive definite, which is a sufficient condition for the existence and uniqueness of the solution of system (1) for given. In the case of a multi-support beam under consideration, the forces on the supports $Q_{ji(t)}$ ($j = y, z$; $i = 0, 1, 2, \ldots, N$) depend on the stress state from the conditions that the increments of displacements on the supports.

The state function $\psi(y, z, t)$ is found iteratively using the well-known algorithm [10]. At each iteration with respect to ψ, it is necessary to solve the system of equilibrium equations (1), the matrix of which is symmetric and positive definite, which is a sufficient condition for the existence and uniqueness of the solution of system (1) for given $\bar{M}_j$.

In the case under consideration, the beams on two supports $Q_{ji}(t)$ ($j = y, z$; $i = 0, 1, 2, \ldots, N$) depend on the stress state from the conditions that the increments of displacements on the supports

$$\Delta U_{ji} = 0, \quad (j = y, z; \quad i = 0, 1, \ldots, N). \quad (7)$$

Since at each iteration with respect to ψ the solution with respect to the function $\Delta U_j(x, t)$ is determined for given values of $\psi(x, y, z, t)$, it is more convenient to search for it in the form of a sum

$$\Delta U_j(x,t) = \Delta U_j^{(T)}(x,t) + \Delta U_j^{(Q)}(x,t), \quad (j = z, y). \quad (8)$$

Accordingly, the increment of curvature $\Delta x_{jj}(x, t)$ is represented by the sum

$$\Delta x_{ij}(x,t) = \Delta x_{ij}^{(T)}(x,t) + \Delta x_{ij}^{(Q)}(x,t). \quad (9)$$

In this case, $\Delta x_{ij}^{(T)}$ they satisfy the equilibrium equations in the section x = const $\bar{M}_j = 0$, and $\Delta x_{jj}^{(Q)}(x,t)$, respectively, are determined from equations (1) in the form:

$$\Delta x_{zz}^{Q_j} L_{jz} + \Delta x_{yy}^{Q_j} L_{jy} = \bar{M}_j(Q_j), \quad (j = y, z); \quad (10)$$

$$\Delta x_{yy}^{Q} = \frac{L_{zz}\bar{M}_y - \bar{M}_z L_{zy}}{L_{zz}L_{yy} - L_{zy}^2} = \bar{M}_y A_y - M_z D; \\ \Delta x_{zz}^{Q} = \frac{L_{yy}\bar{M}_z - \bar{M}_y L_{zy}}{L_{zz}L_{yy} - L_{zy}^2} = \bar{M}_z A_z - M_y D. \quad (11)$$

where l_i – the distance from the i-support to the support can be written:

$$\bar{M}_j(x) = Q_{0j} l_1 + Q_{1j}(x - l_1),$$

$\bar{M}_y$, $\bar{M}_z$ – bending moments in the section x = const from the sought-after forces $Q_{yi}(t)$, $Q_{zi}(t)$ ($i = 0, 1, \ldots, N$).

$$A_y = \frac{L_{zz}}{\Delta}, \quad D = \frac{L_{zy}}{\Delta}, \quad A_z = \frac{L_{yy}}{\Delta}, \quad \Delta = L_{zz}L_{yy} - L_{zy}^2.$$

Considering the static equations for forces $Q_{ji}(t)$, т. е.

$$\sum_{i=0}^{N} Q_{ji} = 0 \quad \text{and} \quad \sum_{i=0}^{N} Q_{ji} l_i = 0, \quad (12)$$

where l_i – the distance from the i-support to the support can be written:

$$\bar{M}_j(x) = Q_{0j} l_1 + Q_{1j}(x - l_1) \quad \text{for} \quad l_1 < x < l_2; \\ \bar{M}_j(x) = Q_{0j} x + Q_{1j}(x - l_1) + Q_{2j}(x - l_2) \\ \text{for} \quad l_2 < x < l_3$$

etc., i. e. for $l_i < x < l_{i+1}$

$$\bar{M}_j(x,t) = \sum_{n=0}^{i} Q_{nj}(t)(x - l_n) \quad (13)$$

at $j = y, z$; $i = 1, 2, \ldots, N - 1$; $l_0 = 0$.

Using condition (4), as well as the dependencies $\Delta x_{jj} = -\dfrac{\partial^2 \Delta U_j}{\partial x^2}$, we obtain after integration taking into account (1) and (7), (8) a system of $2(N-1)$ equations with respect to the known Q_{ji} and the constant of integration C_0.

$$C_{0y} l_i + \int_0^{l_i}\int_0^{x} \Delta x_{jj}^{(T)}(t,x)dxdx + \sum_{n=0}^{i}\left[Q_{ny}(t)\Phi_{in}^{(y)} - Q_{nz}R_{in}\right] = 0;$$
$$C_{0z} l_i + \int_0^{l_i}\int_0^{x} \Delta x_{zz}^{(T)}(t,x)dxdx + \sum_{n=0}^{i}\left[Q_{nz}(t)\Phi_{in}^{(z)} - Q_{ny}R_{in}\right] = 0, \quad (14)$$

where

$$\Phi_{in}^{(j)} = \int_{l_{i-1}}^{l_i}\int_{l_{i-1}}^{x} A_j(x,t)(x - l_{i-1})dxdx,$$

$$R_{in} = \int_{l_{i-1}}^{l_i}\int_{l_{i-1}}^{x} D(x,t)(x - l_{i-1})dxdx.$$

The most loaded unit of the load-bearing structures of freight cars is the frame. The main longitudinal load acting on the frame during operational modes is perceived by the backbone beam (Fig. 1).

As an example, (Fig. 2) shows the calculated results of the kinetics of the displacements U_y of the axial line points of the ridge beam passing through the center of gravity of the sections after welding. The calculation is performed for 1/3 of the length of the ridge beam of the gondola car using the similarity method [12, 13]. The beam profile and welding heating are symmetrical relative to the Y axis, therefore the displacements U_z are equal to zero.

The experimental results showed close agreement with the calculated data, both in the nature of the distribution and in the magnitude of (Fig. 3). The use of software based on the developed calculation algorithm made it possible to quickly determine the optimal distances between supports for beams of different rigidity to ensure acceptable transverse displacement of the beam at the moment of passage of the welding source.

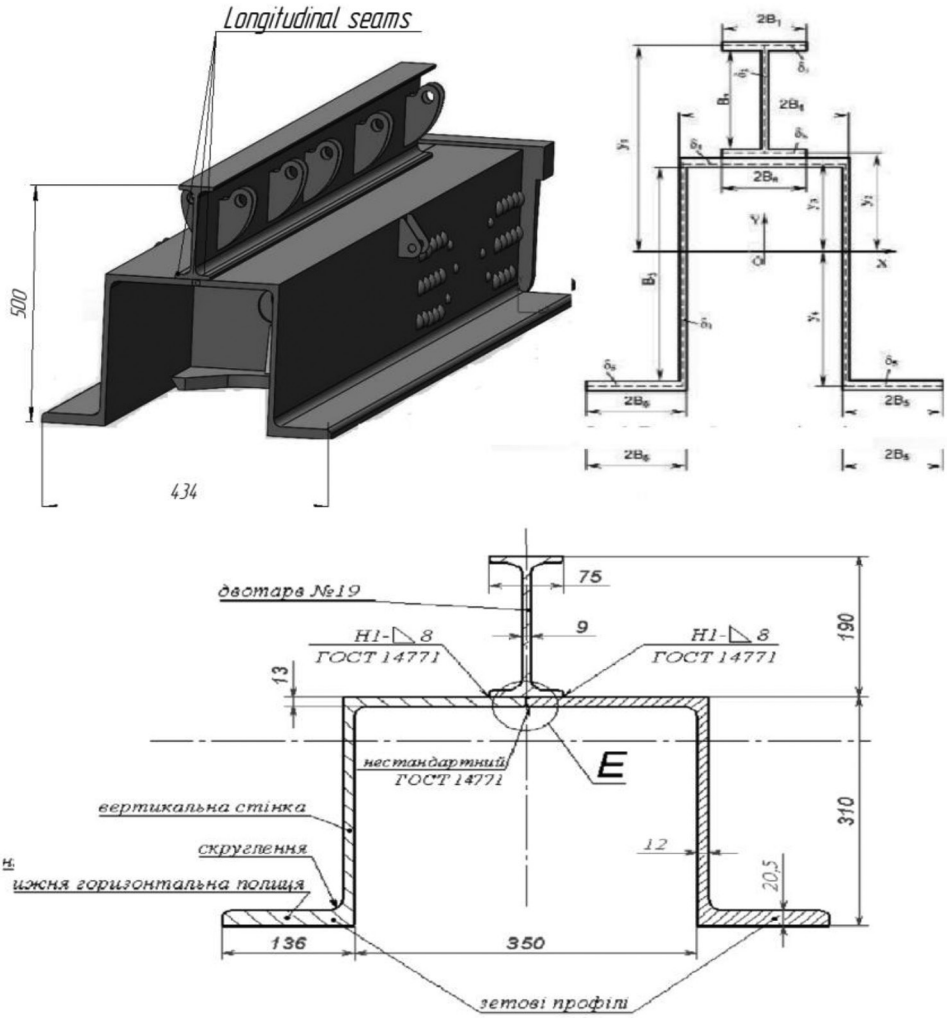

Fig. 1. Cross-section of the ridge beam of a gondola car

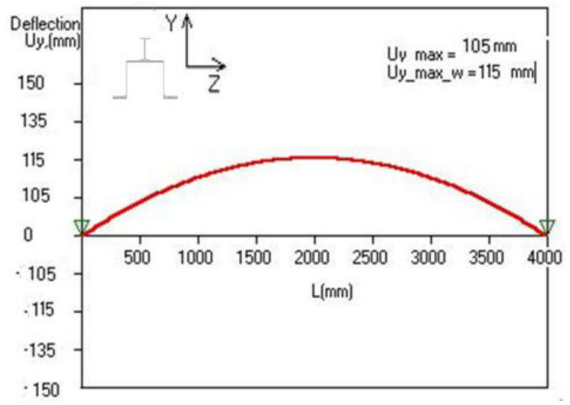

Fig. 2. Calculated results of the kinetics of displacements U_y of the axial line points of the ridge beam during welding after complete cooling

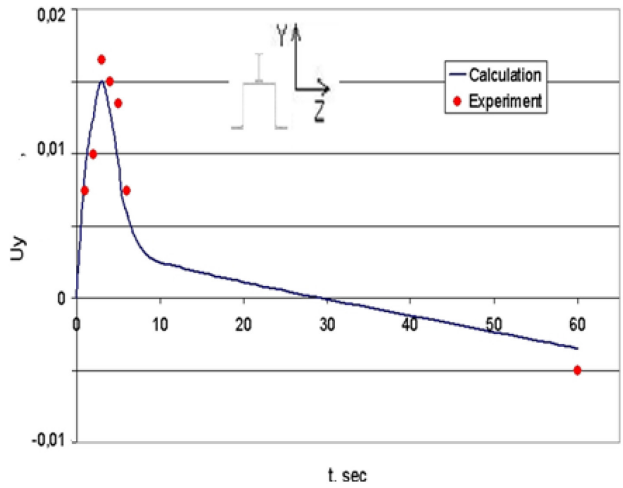

Fig. 3. Comparison of calculated and experimental data on the kinetics of transverse movement of the ridge beam at the moment of passage of the welding source

Conclusion.

1. Reducing the deformation of car metal structures is critically important to ensure their reliability and durability.

2. A mathematical description of car metal structures has been created and a similar mathematical apparatus allows for lining selection of optimal welding deformations

3. You have determined that 60 % of the area of the upper sections of the *Z*-profiles at the welding station after welding of the beam is covered by a zone of excess plasticity after welding, and that the metal in this zone has excess tensile stresses at the level of fluidity.

4. The results of the de-fracture of the stress-deformed mill when welding late welds of transverse cuts on model problems do not coincide with the existing theoretical findings about the machine and are consistent with the known results of other authors.

Recommendations for further research. It is recommended to consider the possibility of using methods to reduce residual stresses, such as optimizing the technology of preliminary bending of the beam before welding.

The development of a method for calculating the parameters of the preliminary active mechanical load for a beam folded on tacks is a promising research direction. This approach can become an alternative to the thermal straightening method, contributing to the reduction of residual deflection and increasing the accuracy of manufacturing metal structures.

Bibliography:

1. O. Fomin, O. Kozinka, V. Ishchenko, O. Burlutskyy. Repair means for typical and composite open-wagon bodies- II International Conference “In-service Damage of Materials: Diagnostics and Prediction”-Procedia Structural Integrity 59. 2024 P. 523–530. https://doi.org/10.1016/j.prostr.2024.04.074

2. Напруження та деформації при зварюванні і паянні / за заг. ред. Л. М. Лобанова. Миколаїв НУК, 2016. 246 с.

3. Бурлуцький О. В., Кочешкова Н. С. Визначення зварювальних деформацій які виникають під час життєвогоциклу піввагона *Збірник наукових праць Державного економіко-технологічного університету транспорту Серія Транспортні системи і технології ДЕТУ*, 2015. № 26–27. С. 92–101.

4. Фомін О. В. Дослідження дефектів та пошкоджень несучих систем залізничних напіввагонів: монографія / О. В. Фомін. Київ, ДЕТУТ, 2014. С. 299.

5. Чухліб В. Л., Губський С. О., Окунь А. О. Формалізовані підходи до визначення числа технологічних переходів при виробництві гнутих профілів *Вісник Національного технічного університету «ХПІ». Сер. зб. наук. пр. Харків НТУ «ХПІ»*, 2020. № 2. С. 169–173.

6. Губський С. О. Чухліб В. Л., Біба М. В Моделювання формоутворення гнутого профілю зі змінним перерізом *Вісник Національного технічного університету «ХПІ». Сер. зб. наук. пр. Харків НТУ «ХПІ»*, 2022. № 1. С. 80–84.

7. ДСТУ 7598:2014 Вагони вантажні. Загальні вимоги до розрахунків та проектування нових і модернізо-ваних вагонів колії 1520 мм (несамохідних). Київ : Держстандарт України. 2015. С. 162.

8. Махненко О. В. Прогнозування деформацій при зварюванні і термічному правленні конструкцій на основі методів термопластичності і функції усадки : *автореф. дис.. д-ра техн. наук: 05.03.06; НАН України, Ін-т електрозварювання ім. Є. О. Патона*. 2009. С. 40.

9. Кандала С. М. Ресурс елементів внутршньо корпусних пристроїв реактора ВВЕР-1000 з урахуванням залишкових зварювальних напружень. *Дис. доктора філософій: за спеціальністю 132 – «Матеріалознавство» (13 – Механічна інженерія*). – Інститут електрозварювання ім. Є. О. Патона НАН України, Київ, 2023. С 32.

10. Y. Luo, Prediction D., L. Deng, H. Murakawa Deformation for Large Welded Structures Based on *Inherent Strain Trans. of JWRI*. 2004. Vol. 33, № 1. P. 65–70.

11. Опір матеріалів (спеціальний курс), теорія пружності та пластичності/ за заг. ред. В. М. Трач, Каравела, Київ., 2016 С. 434.

12. Єрмолаєв, Г. В. Міцність зварних з'єднань *підручник*, Миколаїв : НУК, 2007. С. 220.

13. Основи математичного имоделювання / За заг. ред. д.т.н., доц. О. А. Балтовського. Одеський держ. Унів-т внутр. справ, 2023. С. 125.

Фомін О. В., Бурлуцький О. В., Красулін О. С., Тарасенко О. В., Гунько Є. В. МАТЕМАТИЧНЕ ОПИСАННЯ ФУНКЦІЇ УСАДКИ ДЛЯ ВИЗНАЧЕННЯ ДЕФОРМАЦІЙ МАШИНОБУДІВНИХ КОНСТРУКЦІЙ

Стаття присвячена математичному описанню функції усадки яка застосовується для визначення деформацій після зварювальних робіт в машинобудівних конструкцій. У статті зазначена важливість залізничного транспорту в її загальній транспортній системі країни, а також відмічене його провідну роль у здійсненні внутрішньодержавних та зовнішньодержавних економічних зв'язках країни.. Зазначена важлива роль технологічного процесу зварювання при виробництві нових та модернізації існуючих одиниць вагонного парку. Важлива роль з прогнозувати напружено-деформований стан великогабаритних зварних конструкцій в даний час можливо лише за допомогою наближеного методу функції усадки. Однією з перших робіт, де використано метод і напруження на основі функції усадки, є робота Е. О. Патона з колегами, опублікованому в 1936 р., в якому представлено всебічне дослідження залишкових напруг зварювання. Тут використано ідею розрахунку залишкових зварювальних напружень методами теорії пружності для заданого значення усадкових поздовжніх деформацій, які були визначені експериментально з простих дослідів. Деформації металоконструкцій вагонів є поширеною проблемою, яка виникає при їх виготовленні, експлуатації та ремонті. Основними причинами цих деформацій є залишкові напруги, що виникають в процесі зварювання, а також механічні пошкодження в процесі експлуатації. Згідно з нормами проектування вагона напруги в ньому визначаються поздовжніми силами, що діють уздовж осі зчеплення, і вертикальним навантаженням, яке включає корисне навантаження і власну вагу кузова вагона.. Також у роботі запропоновано використовувати розрахунково-експериментальний метод розв'язування оберненої задачі з урахуванням результатів вимірювання зварювальних деформацій на малих зразках для найбільш точного визначення параметрів функції усадки.

У статті розкрито, методика розрахунку деформацій вагонних металоконструкцій, які виникають в процесі їх зварювання. Наведені результати математичне описання функції усадки для визначення деформацій машинобудівних конструкцій. В якості прикладу наведені результаті математичне моделювання хребтової балки вантажних вагонів.

На підставі отриманих результатів обґрунтовано доцільність і необхідність подальших досліджень можливість застосування методів зниження залишкових напружень, наприклад оптимізації технології попереднього згинання балки перед зварюванням. Такий підхід може стати альтернативою методу термічної правки, сприяючи зменшенню залишкового прогину та підвищенню точності виготовлення металоконструкцій.

Ключові слова: *залізничний транспорт, рухомий склад, вагонний парк, зварювання, машинобудівних конструкцій, після зварювальні деформації, функції усадки, математичне описання, математичні моделі.*